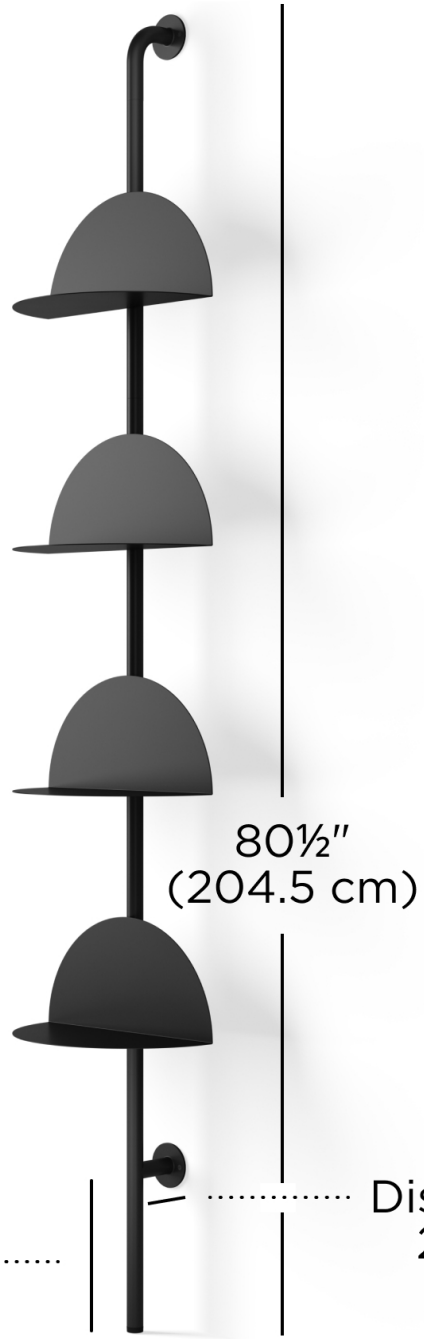
80½"
(204.5 cm)
Baseboard
Clearance
9⅝" (24.6 cm)
Distance to Wall
2½"(6.5 cm)

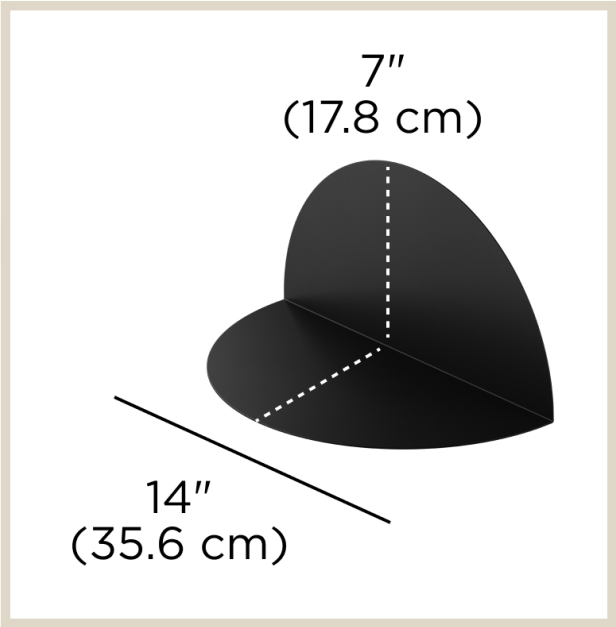
7"
(17.8 cm)
14"
(35.6 cm)

umbra